PART NUMBER	SURFACE AREA	MASS
1GA6FJ4	6944 mm2	41 g

REVISIONS			
REV	DESCRIPTION	DATE	APPROVED
B	REDRAWN, UPDATED TO DANFOSS FORMAT & DIMENSION STYLE. 1) UPDATED BOM. 2) UPDATED NOTE #2.	2024-01-15 SKD/AB	CO-0231969

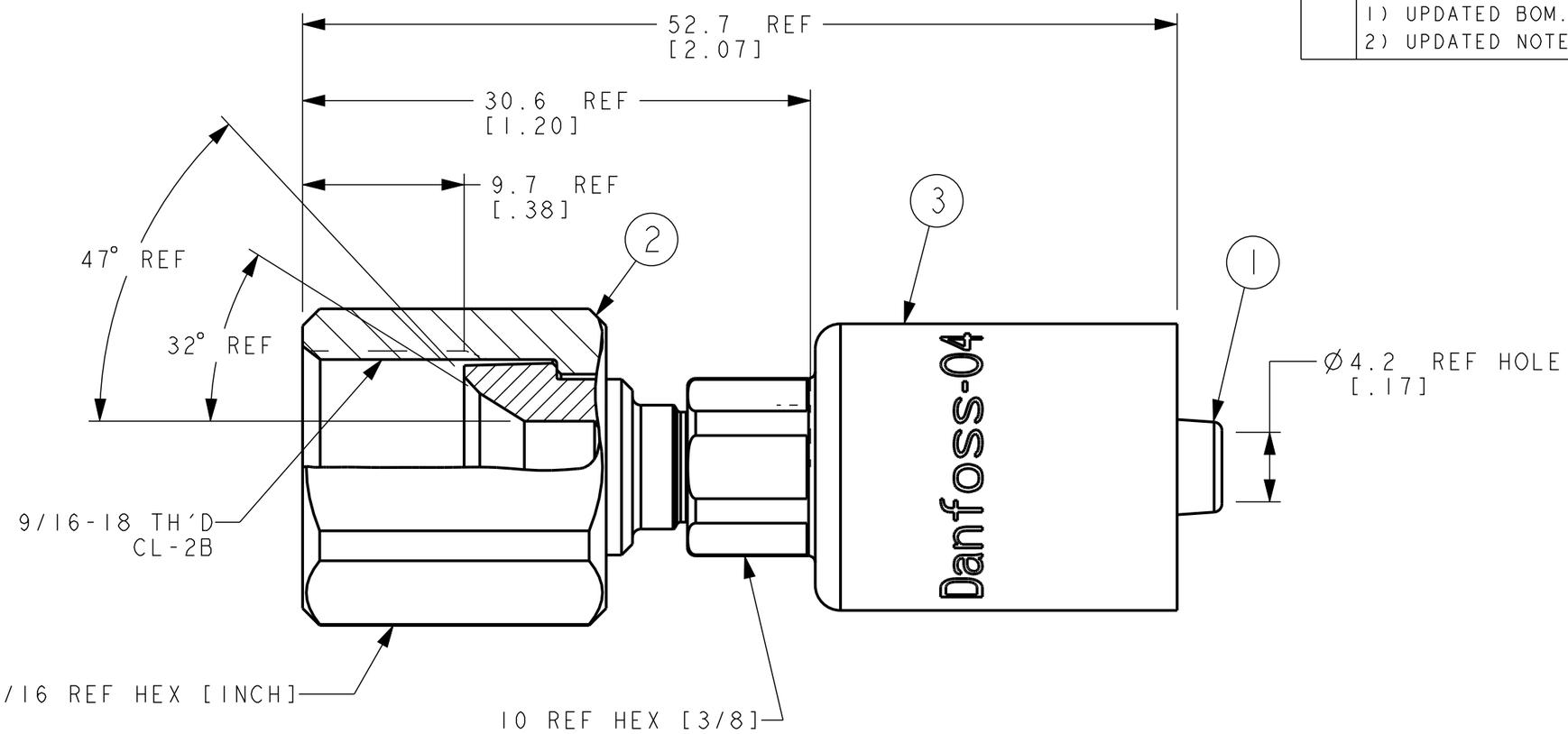

METRIC

B 1	1GA6FJ4	1F40610-0604-S	1290-6S	1F21-04-S		
	PART NUMBER	1 NIPPLE	2 NUT	3 SOCKET		

LIST OF MATERIALS

ITEM NO.	MATERIAL
1	STEEL
2	STEEL
3	STEEL

FLUID CONVEYANCE DIVISION
MAUMEE, OHIO U.S.A.

Danfoss

DRAWN	S. DEVADHE
CHECKED	S. DEVADHE
APPROVED	A. BERKEL
RELEASE DATE	2024-01-15
DRAWING INTERPRETATION PER ES 10	

DRAWING TITLE
FITTING ASSEMBLY
SAE 37° SWIVEL, OTC

CO-0231969	CAGE CODE	01276
THIRD ANGLE PROJECTION	DIST	U
	SIZE	A3
	SCALE	3/1
	SHEET	1

DRAWING NUMBER: 1GA6FJ4
REV: B

THE REPRODUCTION, DISTRIBUTION, AND UTILIZATION OF THIS DOCUMENT AS WELL AS THE COMMUNICATION OF ITS CONTENTS TO OTHERS WITHOUT EXPLICIT AUTHORIZATION IS PROHIBITED. OFFENDERS WILL BE HELD LIABLE FOR THE PAYMENT OF DAMAGES. ALL RIGHTS RESERVED IN THE EVENT OF THE GRANT OF A PATENT, UTILITY MODEL OR DESIGN. (PER ISO 16016)

2. PROCESS AS FOLLOWS: (B 2)
   a) ASSEMBLE NUT.
   b) ASSEMBLE SOCKET PER ACES 2813.

1. DIMENSIONS ARE IN MILLIMETERS [INCHES].